1205067 3600 OB))AMB.MORRUM ZX 3600 IVCB-4

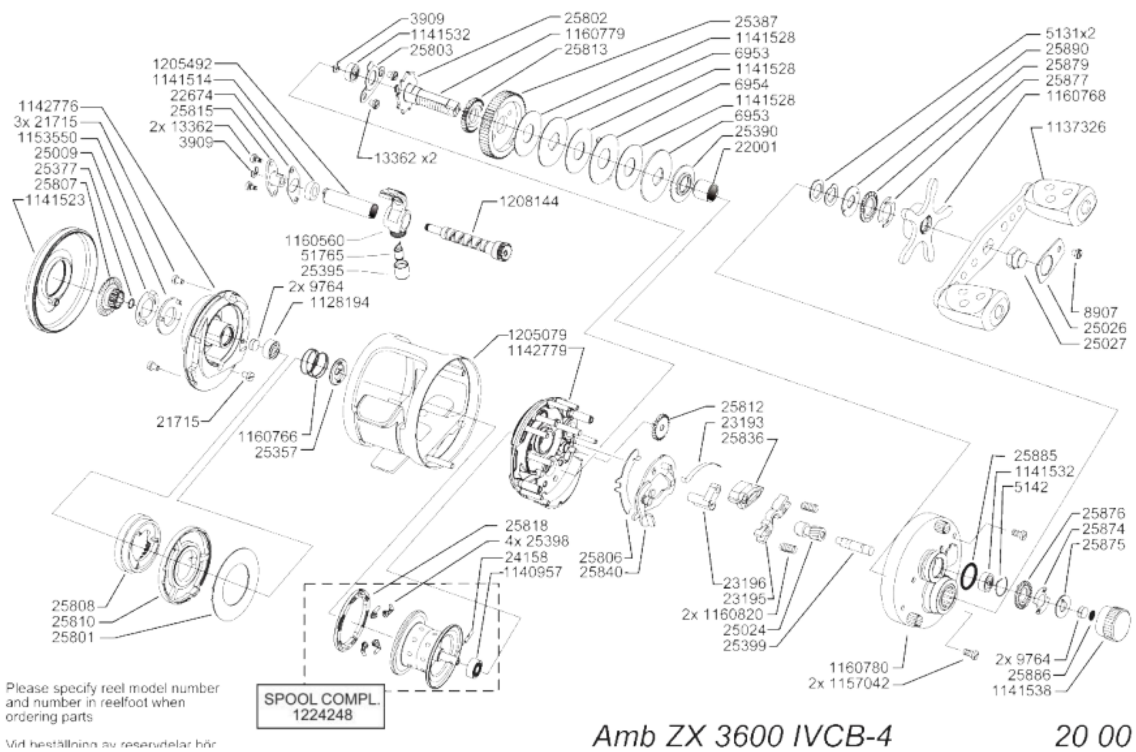

	ﾊﾟｰﾂID	パーツ名	価格
	5131	SPRING WASHER	￥200
	9764	WASHER	￥200
	13362	SCREW	￥200
	21715	SCREW	￥200
	25398	BRAKE WEIGHT ARM	￥300
	25801	BRAKE PLATE	￥600
	25802	DRAIVE GEAR PLATE	￥200
	25803	LOCK WASHER	￥600
	25806	LINK ARM	￥600
	25807	IVCB-DIAL	￥800
	25808	IVCB-CAM	￥800
	25810	BRAKE PLATE HOLDER	￥800
	25812	COG WHEEL	￥200
	25813	COG WHEEL	￥200
	25815	LOCKER BUSHING	￥300
	25818	BRAKE WEIGHT HOLDER	￥300
	25836	SPRING HOLDER	￥600
	25840	LIFT PLATE	￥1,200
	25874	BRAKE CLICK SPRING	￥500
	25875	BRAKE CLICK RATCHET	￥500
	25876	BRAKE CLICK RATCHET	￥200
	25877	DRAG CLICK SPRING	￥500
	25879	DRAG CLICK RATCHET	￥200
	25885	O-RING	￥200
	25886	CAP WASHER	￥200
	25890	RATCHET HOLDER	￥500
	51765	PILOT GUIDE	￥600
	1128194	BALLBEARING	￥800
	1137326	HANDLE	￥3,000
	1140957	BALL BEARING	￥3,000
	1141514	BALLBEARING	￥1,200
	1141523	OUTER SIDE PLATE RIGHT	￥8,000
	1141528	BRAKEWASHER	￥600
	1141532	BALLBEARING	￥1,200
	1141538	SPOOL CONTROL CAP	￥1,500
	1142776	INNER SIDEPLATE LEFT	￥2,000
	1142779	INNER SIDEPLATE RIGHT	￥2,000
	1153550	CLICKPLATE	￥800
	1157042	SCREW	￥200
	1160560	LINE CARRIAGE	￥2,000
	1160766	SPRING	￥200
	1160768	STAR WHEEL	￥2,000
	1160779	MAIN GEAR BUSHING	￥2,000
	1160780	OUTER SIDE PLATE	￥8,600
	1160820	SPRING	￥200
	1205079	FRAME	￥16,000
	1205492	LEVELWIND TUBE	￥1,500
	1208144	WORM SHAFT COMPLETE	￥4,000
	1224248	SPOOL	￥8,700

	ﾊﾟｰﾂID	パーツ名	価格