1521901 5600 AMB.5600CA FACTORY TUNED BLACK

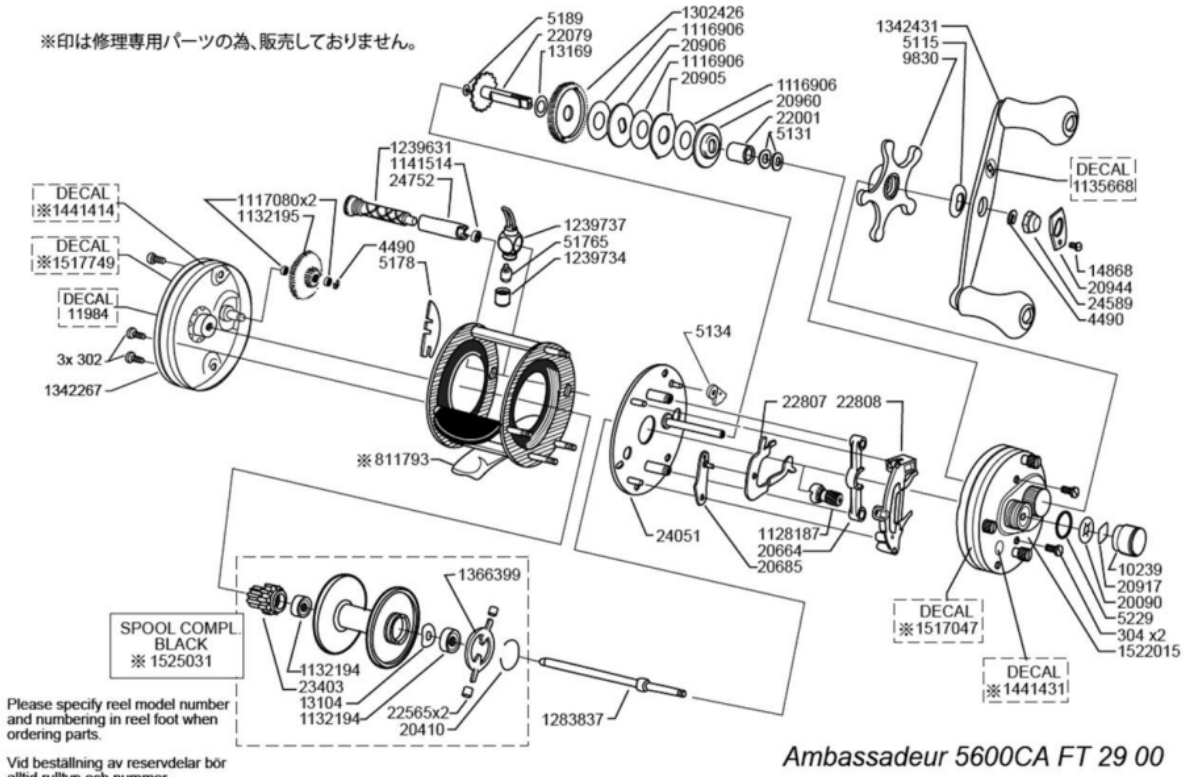

	パーツID	パーツ名	価格
	302	SCREW	￥200
	304	SCREW	￥200
	4490	RETAINER	￥200
	5115	WASHER	￥200
	5131	SPRING WASHER	￥200
	5134	ANTI REVERSE PAWL	￥900
	5178	LOCK PLATE	￥200
	5189	DRIVE SHAFT W	￥200
	5229	O-RING	￥200
	9830	STAR WHEEL	￥1,800
	10239	SPOOL CAP	￥1,200
	11984	修理専用 LABEL 'HIGH SPEED'	￥200
	13104	ADJUSTMENT WASHER	￥200
	13169	BRAKEWASHER	￥200
	14868	SCREW	￥200
	20090	LOCK SPRING	￥200
	20410	RETAINER	￥200
	20664	YOKE POM	￥600
	20685	LINK ARM RIVETED	￥1,000
	20905	DRAG WASHER	￥200
	20906	DRAG WASHER	￥200
	20917	BASE WASHER	￥200
	20944	NUT COVER	￥600
	20960	WASHER	￥600
	22001	HANDLE BUSHING	￥1,200
	22079	MAIN GEAR BUSHING	￥2,900
	22565	BRAKE WEIGHT	￥100
	22807	CLUTCH ARM	￥1,000
	22808	POSITION HOLDER	￥600
	23403	CLICK AND COGWHEEL POM	￥200
	24051	BRAKE PLATE	￥4,800
	24589	HANDLE NUT	￥500
	24752	LEWELWIND TUBE	￥1,900
	51765	PILOT GUIDE	￥600
	811793	修理専用 FRAME COMPLETE	￥7,000
	1116906	CARBON DRAG WASHER	￥200
	1117080	BALL BEARING	￥3,000
	1128187	PINION	￥3,000
	1132194	HYBRID BALL BEARING	￥1,800
	1132195	COG WEEL	￥600
	1135668	修理専用 LABEL (g AS IN GARCIA	￥200
	1141514	BALLBEARING	￥1,200
	1239631	WORM SHAFT COMPLETE 5000	￥4,500
	1239734	LINE CARRIAGE NUT	￥600
	1239737	LINE CARRIAGE	￥1,800
	1283837	SPOOL SHAFT COMPLETE SPECIAL 5000 SIZE	￥3,500
	1302426	MAIN GEAR	￥2,500
	1342267	LEFT SIDEPLATE	￥4,200
	1342431	HANDLE	￥4,000
	1366399	CLUTCH WASHER	￥600

	パーツID	パーツ名	価格
	1441414	修理専用 LABEL 'Product of ABU Sweden'	￥1,500
	1441431	修理専用 LABEL (FT	￥200
	1517047	修理専用 LABEL AMBASSADEUR 5600 CA	￥1,500
	1517749	修理専用 LABEL ASYMETRIC 5600 CA	￥2,000
	1522015	OUTER SIDE PLATE RIGHT COMPLETE	￥8,400
	1525031	修理専用 SPARE SPOOL SPECIAL 5000 JAPAN	￥9,500