1521902 5600 AMB.5601CA FACTORY TUNED BLACK

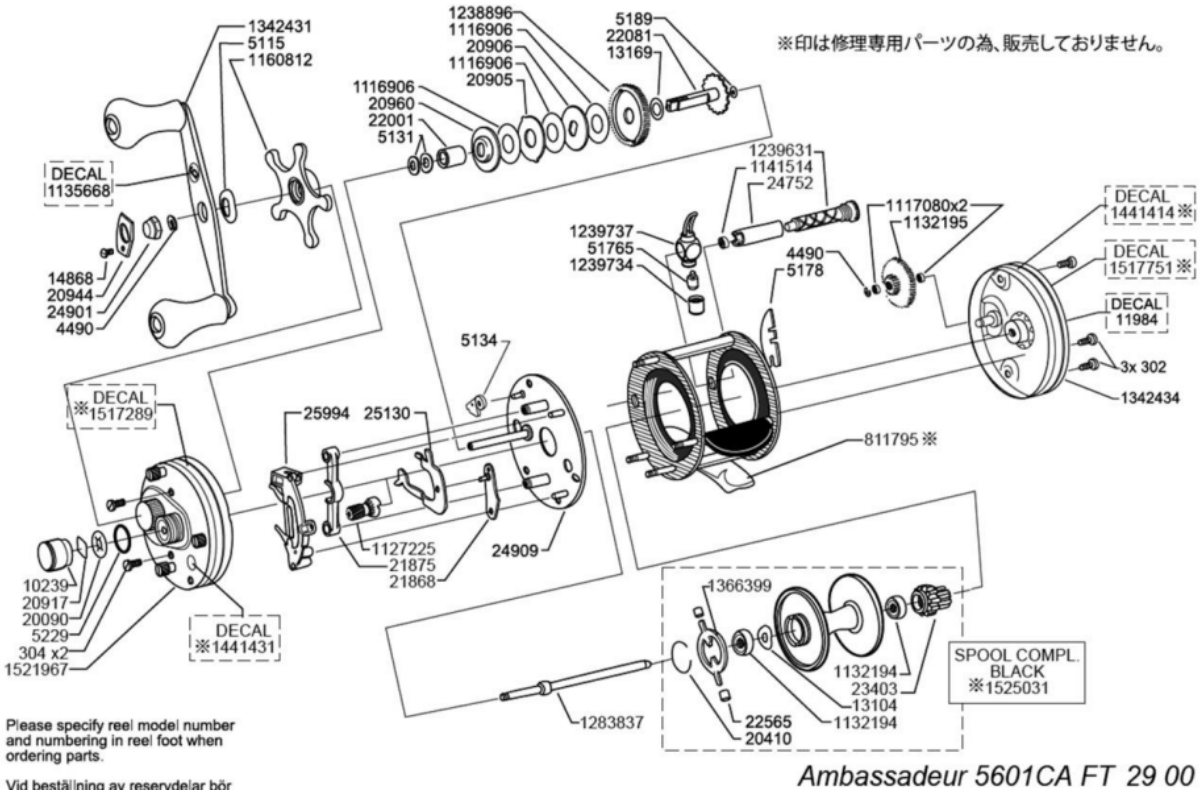

	パーツID	パーツ名	価格
	302	SCREW	￥200
	304	SCREW	￥200
	4490	RETAINER	￥200
	5115	WASHER	￥200
	5131	SPRING WASHER	￥200
	5134	ANTI REVERSE PAWL	￥900
	5178	LOCK PLATE	￥200
	5189	DRIVE SHAFT W	￥200
	5229	O-RING	￥200
	10239	SPOOL CAP	￥1,200
	11984	修理専用 LABEL 'HIGH SPEED'	￥200
	13104	ADJUSTMENT WASHER	￥200
	13169	BRAKEWASHER	￥200
	14868	SCREW	￥200
	20090	LOCK SPRING	￥200
	20410	RETAINER	￥200
	20905	DRAG WASHER	￥200
	20906	DRAG WASHER	￥200
	20917	BASE WASHER	￥200
	20944	NUT COVER	￥600
	20960	WASHER	￥600
	21868	LINK ARM	￥1,100
	21875	PINION YOKE	￥500
	22001	HANDLE BUSHING	￥1,200
	22081	MAINGEAR BUSHING LH	￥2,900
	22565	BRAKE WEIGHT	￥100
	23403	CLICK AND COGWHEEL POM	￥200
	24752	LEWELWIND TUBE	￥1,900
	24901	HANDLE NUT	￥500
	24909	BRAKE PLATE	￥4,800
	25130	CLUTCH ARM LEFT	￥1,000
	25994	POSITION HOLDER LEFT	￥1,100
	51765	PILOT GUIDE	￥600
	811795	修理専用 FRAME COMPLETE	￥7,000
	1116906	CARBON DRAG WASHER	￥200
	1117080	BALL BEARING	￥3,000
	1127225	PINION	￥3,000
	1132194	HYBRID BALL BEARING	￥1,800
	1132195	COG WEEL	￥600
	1135668	修理専用 LABEL (g AS IN GARCIA	￥200
	1141514	BALLBEARING	￥1,200
	1160812	STAR WHEEL	￥1,800
	1238896	MAIN GEAR	￥2,500
	1239631	WORM SHAFT COMPLETE 5000	￥4,500
	1239734	LINE CARRIAGE NUT	￥600
	1239737	LINE CARRIAGE	￥1,800
	1283837	SPOOL SHAFT COMPLETE SPECIAL 5000 SIZE	￥3,500
	1342431	HANDLE	￥4,000
	1342434	RIGHT SIDEPLATE	￥4,200
	1366399	CLUTCH WASHER	￥600

	パーツID	パーツ名	価格
	1441414	修理専用 LABEL 'Product of ABU Sweden'	￥1,500
	1441431	修理専用 LABEL (FT	￥200
	1517289	修理専用 LABEL AMBASSADEUR 5601 CA	￥1,500
	1517751	修理専用 LABEL ASYMETRIC 5601 CA	￥2,000
	1521967	OUTER SIDE PLATE LEFT LH COMPLETE	￥8,400
	1525031	修理専用 SPARE SPOOL SPECIAL 5000 JAPAN	￥9,500