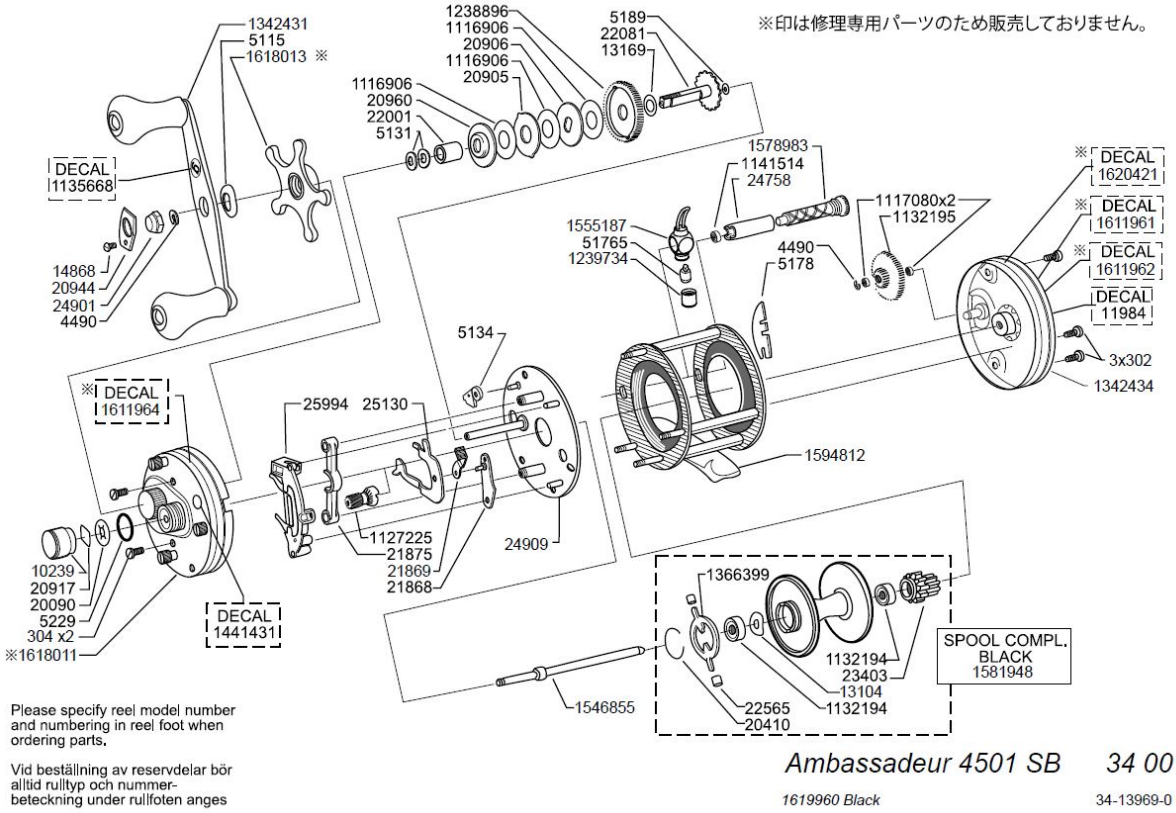

	パーツID	パーツ名	価格
	302	SCREW	￥200
	304	SCREW	￥200
	4490	RETAINER	￥200
	4490	RETAINER	￥200
	5115	WASHER	￥200
	5131	SPRING WASHER	￥200
	5134	ANTI REVERSE PAWL	￥900
	5178	LOCK PLATE	￥200
	5189	DRIVE SHAFT W	￥200
	5229	O-RING	￥200
	10239	SPOOL CAP	￥1,200
	11984	修理専用 LABEL 'HIGH SPEED'	￥200
	13104	ADJUSTMENT WASHER	￥200
	13169	BRAKEWASHER	￥200
	14868	SCREW	￥200
	20090	LOCK SPRING	￥200
	20410	RETAINER	￥200
	20905	DRAG WASHER	￥200
	20906	DRAG WASHER	￥200
	20917	BASE WASHER	￥200
	20944	NUT COVER	￥600
	20960	WASHER	￥600
	21868	LINK ARM	￥1,100
	21869	RELEASE TRIGGER	￥600
	21875	PINION YOKE	￥500
	22001	HANDLE BUSHING	￥1,200
	22081	MAINGEAR BUSHING LH	￥2,900
	22565	BRAKE WEIGHT	￥100
	23403	CLICK AND COGWHEEL POM	￥200
	24758	LEWELWIND TUBE	￥1,500
	24901	HANDLE NUT	￥500
	24909	BRAKE PLATE	￥4,800
	25130	CLUTCH ARM LEFT	￥1,000
	25944	POSITION HOLDER	￥600
	51765	PILOT GUIDE	￥600
	1116906	CARBON DRAG WASHER	￥200
	1116906	CARBON DRAG WASHER	￥200
	1116906	CARBON DRAG WASHER	￥200
	1117080	BALL BEARING	￥3,000
	1127225	PINION	￥3,000
	1132194	HYBRID BALL BEARING	￥1,800
	1132194	HYBRID BALL BEARING	￥1,800
	1132195	COG WEEL	￥600
	1135668	修理専用 LABEL (g AS IN GARCIA	￥200
	1141514	BALLBEARING	￥1,200
	1238896	MAIN GEAR	￥2,500
	1239734	LINE CARRIAGE NUT	￥600
	1342431	HANDLE	￥4,000
	1342434	RIGHT SIDEPLATE	￥4,200
	1366399	CLUTCH WASHER	￥600

	パーツID	パーツ名	価格
	1441431	修理専用 LABEL (FT	￥200
	1546855	SPOOL SHAFT COMPLETE SPECIAL	￥3,500
	1555187	LINE CARRIAGE SPECIAL COMPLETE	￥3,000
	1578983	LEVEL WIND COMPLETE	￥4,500
	1581948	修理専用SPOOL	￥9,500
	1594812	FRAME COMPLETE	￥6,600
	1611961	修理専用 LABEL GARCIA	￥800
	1611962	修理専用 LABEL STRIPER	￥1,500
	1611964	修理専用 LABEL STRIPER DRAG	￥1,800
	1618011	修理専用 OUTER SIDE PLATE LEFT W	￥9,000
	1618013	修理専用 STAR WHEEL COMPLETE LH	￥2,800
	1620421	修理専用 LABEL GARCIA AMBASSADEUR 4501	￥2,000