Abu Garcia MAX-X 750 (1621834)

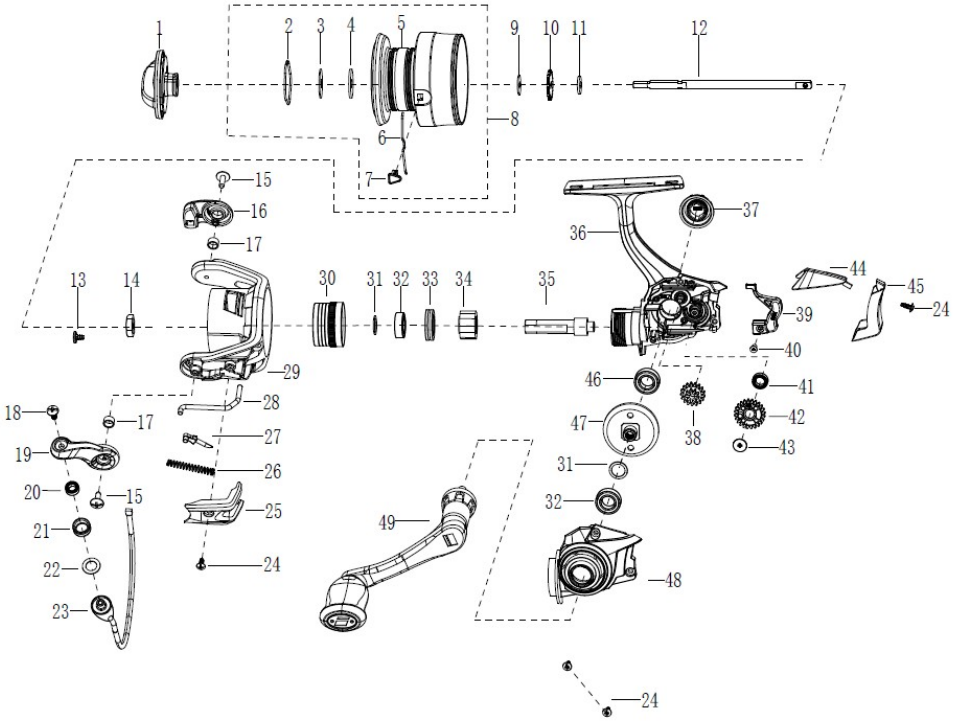

	パーツID	パーツ名	価格
1	1634238	Drag Knob Assembly	￥600
2	1092606	RETAINER RING	￥50
3	1280355	Key Washer	￥200
4	1280354	Drag Washer (2REQ)	￥200
5	1634239	Spool	￥2,000
6	1634195	Line Clip Spring	￥200
7	1634171	Line Clip	￥200
8	1634240	Spool Assembly	￥2,800
9	1178954	SPARE WASHER	￥160
10	1126316	CLICK GEAR	￥100
11	1252700	MAINSHAFT WASHER	￥160
12	1634173	Main Shaft	￥600
13	1529596	NUT SET SCREW	￥200
14	1085606	ROTOR NUT	￥100
15	1448222	BAIL ARM SCREW	￥200
16	1634241	Bail Holder	￥300
17	1188261	BUSHING	￥160
18	1536760	Screw	￥200
19	1634242	Bail Arm	￥300
20	1536761	Brass Bushing	￥400
21	1634090	Line Roller	￥300
22	1529960	WASHER	￥200
23	1634176	Bail Assembly	￥800
24	1411137	SCREW	￥200
25	1634177	Bail Arm Cover	￥200
26	1363787	Trip Spring	￥300
27	1385621	34C-CLA2000 Bail Arm Lever	￥300
28	1634178	Trip Bar	￥300
29	1634243	Rotor	￥1,500
30	1634180	Bearing Retainer	￥400
31	1114764	WASHER	￥50
32	1252717	BEARING	￥800
33	1634181	Bearing Holder	￥200
34	1634182	Clutch Assembly	￥600
35	1634183	Pinion	￥800
36	1634244	Body	￥1,800
37	1634478	DUST CAP	￥300
38	1634185	Reducation Gear	￥300
39	1634186	Slider	￥300
40	1126454	SCREW	￥50
41	1634187	Oscillation Gear	￥400
42	1112125	BALL BEARING	￥600
43	1188428	SCREW	￥160
44	1634188	Bottom Cover	￥300
45	1634189	Rear Cover	￥400
46	1085280	BALL BEARING	￥600
47	1634245	Drive Gear	￥1,000
48	1634246	Body Cover	￥600
49	1634247	Handle Assembly	￥1,500

	パーツID	パーツ名	価格