Abu Garcia MAX-X 3000（1621899）

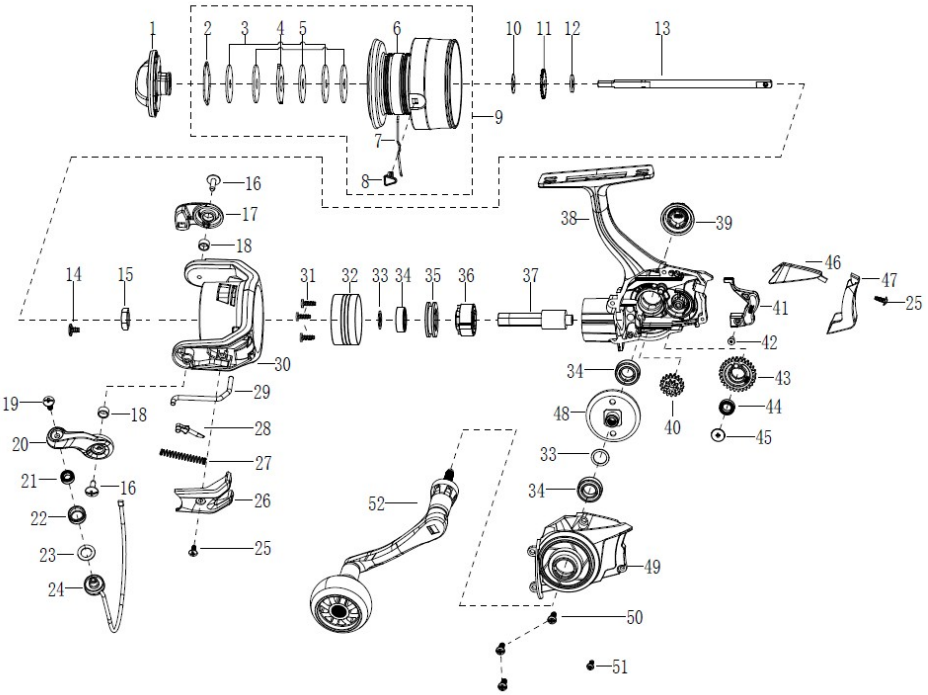

	パーツID	パーツ名	価格
1	1634204	Drag Knob Assembly	￥600
2	1085295	RETAINER RING	￥50
3	1085296	WASHER	￥50
4	1085297	WASHER	￥50
5	1085298	WASHER	￥50
6	1634213	Spool	￥2,200
7	1252740	LINE CLIP SPRING	￥200
8	1252739	LINE CLIP	￥200
9	1634214	Spool Assembly	￥3,000
10	1178954	SPARE WASHER	￥160
11	1126316	CLICK GEAR	￥100
12	1252700	MAINSHAFT WASHER	￥160
13	1634112	Main Shaft	￥600
14	1126258	SCREW	￥50
15	1085606	ROTOR NUT	￥100
16	1448222	BAIL ARM SCREW	￥200
17	1634215	Bail Holder	￥300
18	1188261	BUSHING	￥160
19	1536760	Screw	￥200
20	1634198	Bail Arm	￥300
21	1536761	Brass Bushing	￥400
22	1634090	Line Roller	￥300
23	1529960	WASHER	￥200
24	1634114	Bail Assembly	￥800
25	1411137	SCREW	￥200
26	1634115	Bail Arm Cover	￥200
27	1363787	Trip Spring	￥300
28	1385621	34C-CLA2000 Bail Arm Lever	￥300
29	1634116	Trip Bar	￥300
30	1634208	Rotor	￥1,500
31	1197283	SCREW	￥50
32	1634118	Bearing Retainer	￥400
33	1114764	WASHER	￥50
34	1252717	BEARING	￥800
35	1280475	BEARING HOLDER	￥200
36	1634097	Clutch Assembly	￥600
37	1634119	Pinion	￥800
38	1634216	Body	￥1,800
39	1634478	DUST CAP	￥300
40	1634101	Reducation Gear	￥300
41	1634121	Slider	￥300
42	1525158	Slider Screw	￥200
43	1634122	Oscillation Gear	￥400
44	1112125	BALL BEARING	￥600
45	1188428	SCREW	￥160
46	1634123	Bottom Cover	￥300
47	1634124	Rear Cover	￥400
48	1634210	Drive Gear	￥1,000
49	1634217	Body Cover	￥600
50	1447884	SCREW	￥200

	パーツID	パーツ名	価格
51	1126084	SCREW	￥50
52	1634737	Handle Assembly	￥1,800