MAX-SX750S (1621902)

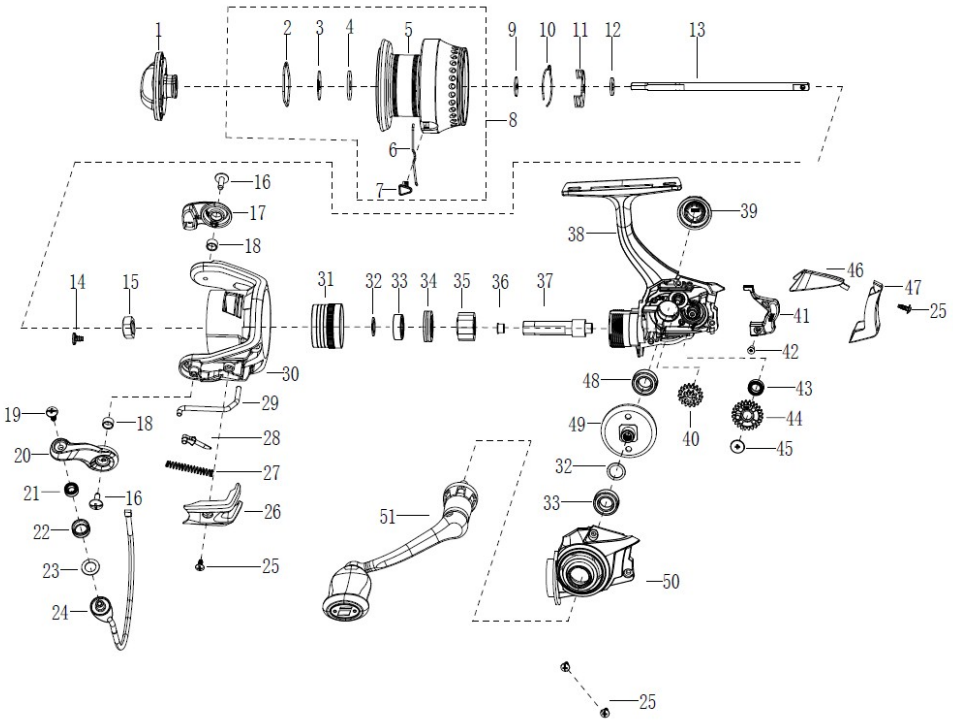

	パーツID	パーツ名	価格
1	1634286	Drag Knob Assembly	￥600
2	1092606	RETAINER RING	￥50
3	1280355	Key Washer	￥200
4	1280354	Drag Washer (2REQ)	￥200
5	1634771	Spool	￥2,000
6	1634195	Line Clip Spring	￥200
7	1252739	LINE CLIP	￥200
8	1634772	Spool Assembly	￥2,800
9	1178954	SPARE WASHER	￥160
10	1634289	Click Spring	￥200
11	1252692	CLICKER HOLDER	￥200
12	1252700	MAINSHAFT WASHER	￥160
13	1634173	Main Shaft	￥600
14	1529596	NUT SET SCREW	￥200
15	1259462	ROTOR NUT	￥160
16	1448222	BAIL ARM SCREW	￥200
17	1634290	Bail Holder	￥300
18	1188261	BUSHING	￥160
19	1536760	Screw	￥200
20	1634291	Bail Arm	￥300
21	1536761	Brass Bushing	￥400
22	1634090	Line Roller	￥300
23	1529960	WASHER	￥200
24	1634499	Bail Assembly	￥800
25	1411137	SCREW	￥200
26	1634177	Bail Arm Cover	￥200
27	1363787	Trip Spring	￥300
28	1385621	34C-CLA2000 Bail Arm Lever	￥300
29	1634292	Trip Bar	￥300
30	1634293	Rotor	￥1,500
31	1634180	Bearing Retainer	￥400
32	1114764	WASHER	￥50
33	1252717	BEARING	￥800
34	1634181	Bearing Holder	￥200
35	1634182	Clutch Assembly	￥600
36	1259449	BUSHING	￥160
37	1634294	Pinion	￥800
38	1634295	Body	￥1,800
39	1658382	DUST CAP	￥300
40	1634185	Reducation Gear	￥300
42	1634186	Slider	￥300
43	1634187	Oscillation Gear	￥400
44	1112125	BALL BEARING	￥600
45	1188428	SCREW	￥160
46	1634188	Bottom Cover	￥300
47	1634189	Rear Cover	￥400
48	1085280	BALL BEARING	￥600
49	1634245	Drive Gear	￥1,000
50	1634296	Body Cover	￥600
51	1634297	Handle Assembly	￥1,500

	パーツID	パーツ名	価格