Abu Garcia MAX-SX 1000S （ 1621903 ）

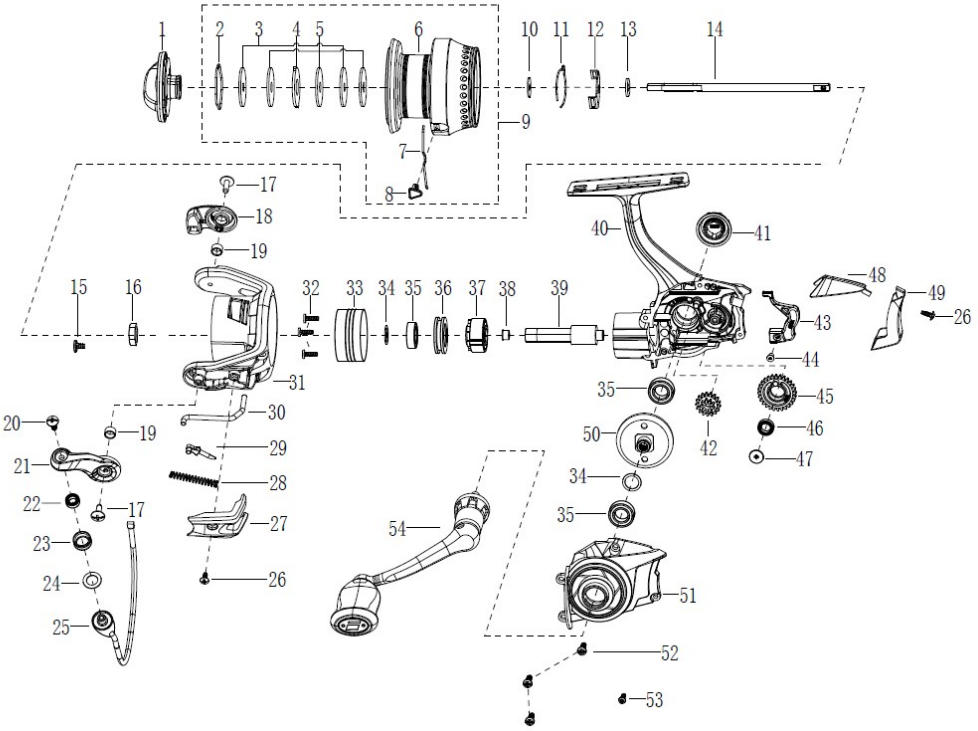

	パーツID	パーツ名	価格
1	1634248	Drag Knob Assembly	￥600
2	1085295	RETAINER RING	￥50
3	1085296	WASHER	￥50
4	1085297	WASHER	￥50
5	1085298	WASHER	￥50
6	1634749	Spool	￥2,000
7	1634195	Line Clip Spring	￥200
8	1252739	LINE CLIP	￥200
9	1634750	Spool Assembly	￥2,800
10	1178954	SPARE WASHER	￥160
11	1634251	Click Spring	￥200
12	1252692	CLICKER HOLDER	￥200
13	1252700	MAINSHAFT WASHER	￥160
14	1634087	Main Shaft	￥600
15	1126258	SCREW	￥50
16	1259462	ROTOR NUT	￥160
17	1448222	BAIL ARM SCREW	￥200
18	1634252	Bail Holder	￥300
19	1188261	BUSHING	￥160
20	1536760	Screw	￥200
21	1634089	Bail Arm	￥300
22	1530489	Bearing 4x7x2.5	￥600
23	1634090	Line Roller	￥300
24	1529960	WASHER	￥200
25	1634253	Bail Assembly	￥800
26	1411137	SCREW	￥200
27	1634254	Bail Arm Cover	￥200
28	1363787	Trip Spring	￥300
29	1385621	34C-CLA2000 Bail Arm Lever	￥300
30	1634255	Trip Bar	￥300
31	1634256	Rotor	￥1,500
32	1634095	Screw	￥200
33	1634096	Bearing Retainer	￥400
34	1114764	WASHER	￥50
35	1252717	BEARING	￥800
36	1252718	BEARING HOLDER	￥400
37	1634097	Clutch Assembly	￥600
38	1259449	BUSHING	￥160
39	1634257	Pinion	￥800
40	1634751	Body	￥1,800
41	1658382	DUST CAP	￥300
42	1634101	Reducation Gear	￥300
43	1634102	Slider	￥300
44	1525158	Slider Screw	￥200
45	1634103	Oscillation Gear	￥400
46	1112125	BALL BEARING	￥600
47	1188428	SCREW	￥160
48	1634104	Bottom Cover	￥300
49	1634105	Rear Cover	￥400
50	1634201	Drive Gear	￥1,000

	パーツID	パーツ名	価格
51	1634259	Body Cover	￥600
52	1447884	SCREW	￥200
53	1126084	SCREW	￥50
54	1634260	Handle Assembly	￥1,500