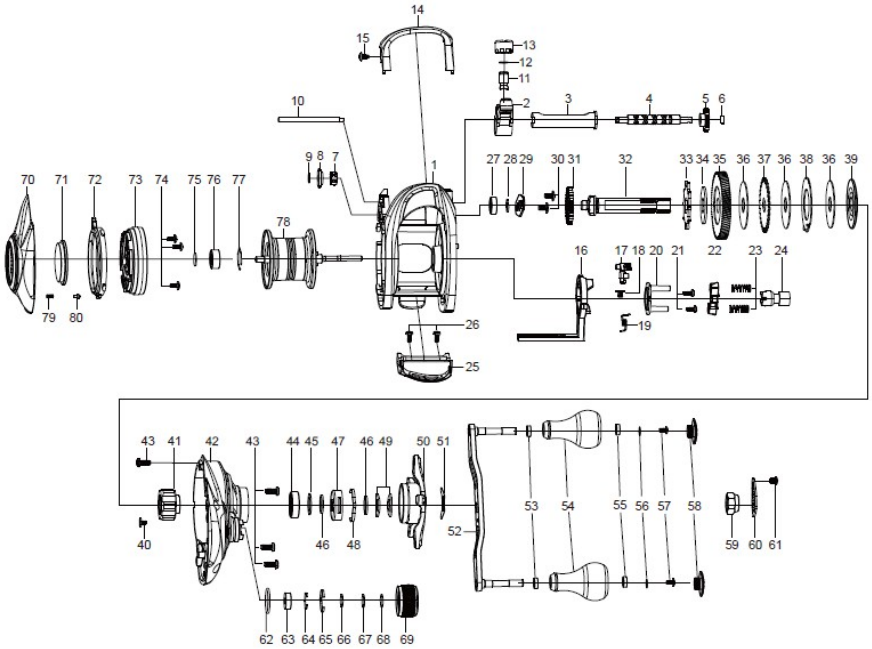

Please specify reel model number and number in reel foot when ordering parts.

Vid beställning av reservdelar bör alltid rulltyp och nummerbeteckning under rullfoten anges

Ambassadeur **REDMAX FUNE** **35 00**

1650256 34-14120-0

	パーツID	パーツ名	価格
1	1649687	FRAME	￥5,000
2	1649688	LINE GUIDE	￥500
3	1559018	LEVEL WIND TUBE	￥300
4	1649689	WORM SHAFT	￥1,500
5	1649690	WORM SHAFT GEAR	￥300
6	1649691	WORM SHAFT PIN HOLDER	￥200
7	1559042	WORM SHAFT PIN HOLDER	￥200
8	1559041	WORM SHAFT BUSHING	￥200
9	1308797	RETAINER	￥200
10	1649692	LINE GUIDE SHAFT	￥300
11	1649693	PAWL	￥500
12	1649694	WASHER	￥200
13	1559045	LINE GUIDE NUT	￥200
14	1649695	FRONT COVER	￥600
15	1559047	SCREW	￥200
16	1649696	BUTTON TAB	￥300
17	1559127	KICK LEVER	￥500
18	1649697	LIFT CURVE SPRING	￥200
19	1649698	CLUTCH SPRING	￥200
20	1559130	LIFT CURVE PLATE	￥300
21	1559054	SCREW	￥200
22	1649699	YOKE	￥300
23	1559071	SPRING	￥200
24	1649700	PINION	￥1,000
25	1649701	THUMB BAR	￥500
26	1559056	SCREW	￥200
27	1649702	BALL BEARING	￥600
28	1559058	RETAINER	￥200
29	1559059	MAIN GEAR SHAFT PLATE	￥300
30	1649703	SCREW	￥200
31	1649704	LEVEL WIND GEAR	￥300
32	1559061	MAIN GEAR SHAFT	￥1,200
33	1649705	RATCHET	￥300
34	1559064	DRAG WASHER	￥300
35	1651912	MAIN GEAR	￥2,000
36	1651913	DRAG WASHER	￥500
37	1651914	PRESSURE WASHER	￥300
38	1651915	EAR WASHER	￥300
39	1651916	PRESSURE WASHER	￥600
40	1559073	SCREW	￥200
41	1559074	ONE WAY CLUTCH	￥1,200
42	1649707	GEAR SIDE PLATE	￥2,000
43	1559076	SCREW	￥200
44	1559081	BALL BEARING	￥800
45	1559084	SPRING WASHER	￥200
46	1559085	WASHER	￥200
47	1559082	CLICK SPRING HOLDER	￥300
48	1559083	CLICK SPRING	￥200
49	1559084	SPRING WASHER	￥200
50	1649708	STAR WHEEL	￥1,200

	パーツID	パーツ名	価格
51	1559087	WASHER	￥200
52	1651917	HANDLE	￥3,000
53	1651918	BUSHING	￥200
54	1651919	HANDLE KNOB	￥800
55	1651918	BUSHING	￥200
56	1651920	WASHER	￥200
57	1559092	SCREW	￥200
58	1651921	HANDLE KNOB CAP	￥800
59	1559137	HANDLE NUT	￥500
60	1649712	HANDLE NUT COVER	￥200
61	1559096	SCREW	￥200
62	1559077	O-RING	￥200
63	1649713	BUSHING	￥200
64	1649714	RING	￥200
65	1651922	CLICK SPRING	￥200
66	1651923	WASHER	￥200
67	1651924	WASHER	￥200
68	1651925	WASHER	￥200
69	1651926	BRAKE KNOB	￥1,000
70	1649718	PALM SIDE PLATE	￥2,000
71	1651927	PALM SIDE PLATE CAP	￥500
72	1649721	DIAL PLATE	￥300
73	1649722	BEARING HOUSING	￥1,200
74	1559109	SCREW	￥200
75	1559114	FRICTION WASHER	￥200
76	1559115	BALL BEARING	￥800
77	1559116	RING	￥200
78	1651928	SPOOL COMPLETE	￥3,500
79	1559118	CLICK PIN	￥200
80	1559117	SPRING	￥200